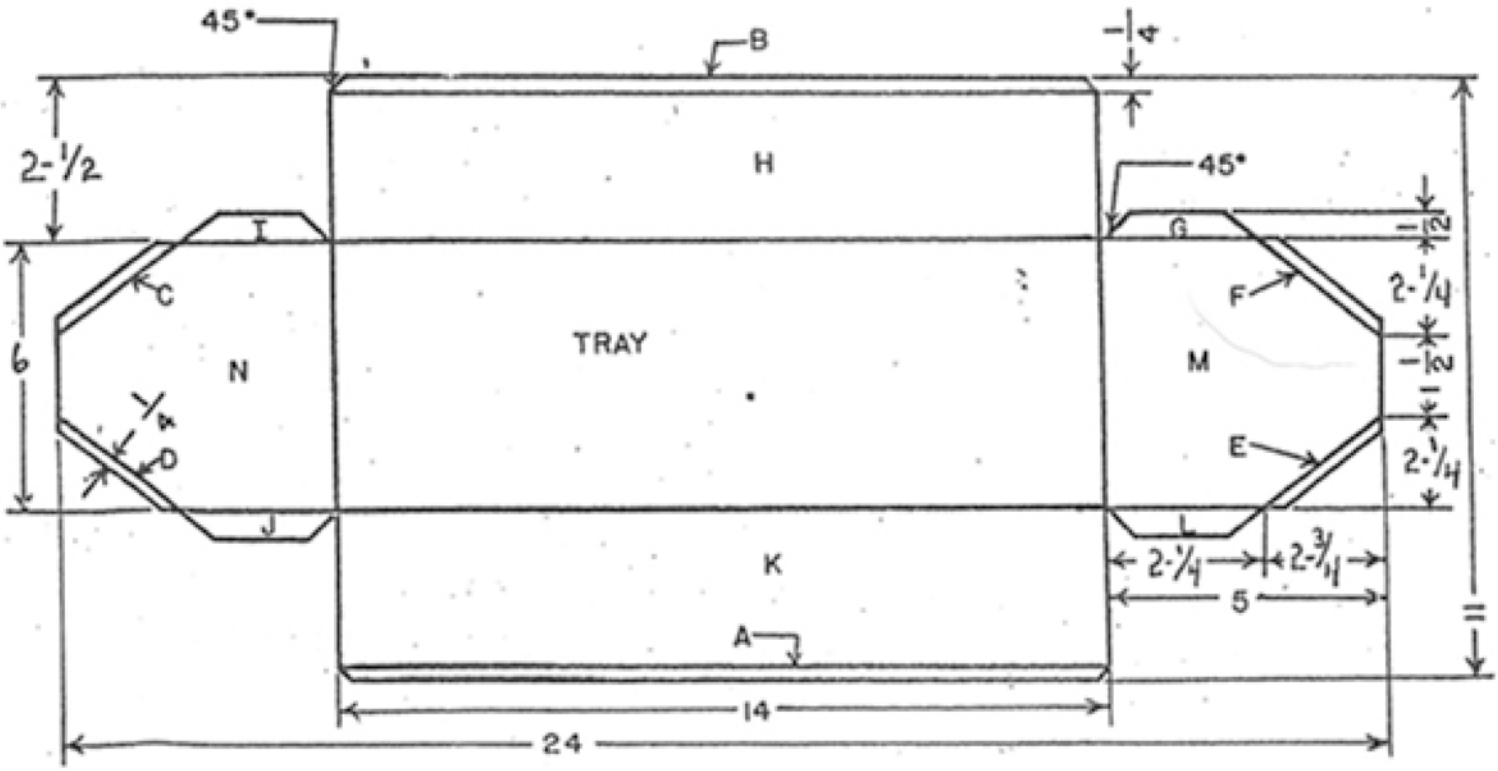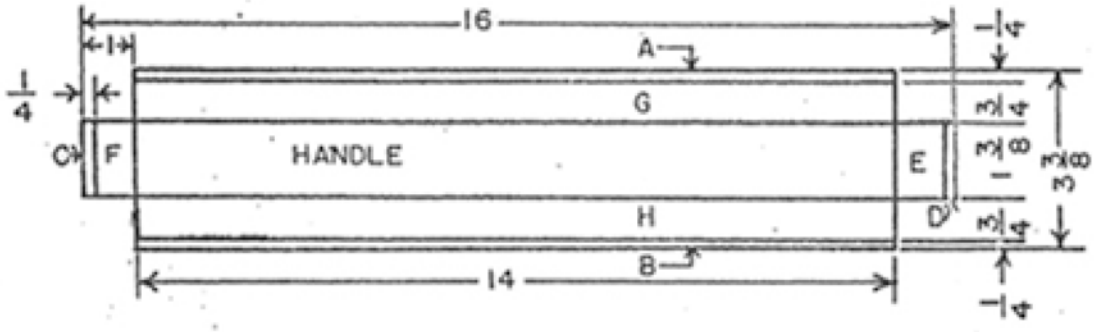© COPYRIGHT 2009 TOM FOSSEEN. ALL RIGHTS RESERVED.