© Copyright 1970 Tom Fosseen. All rights reserved.

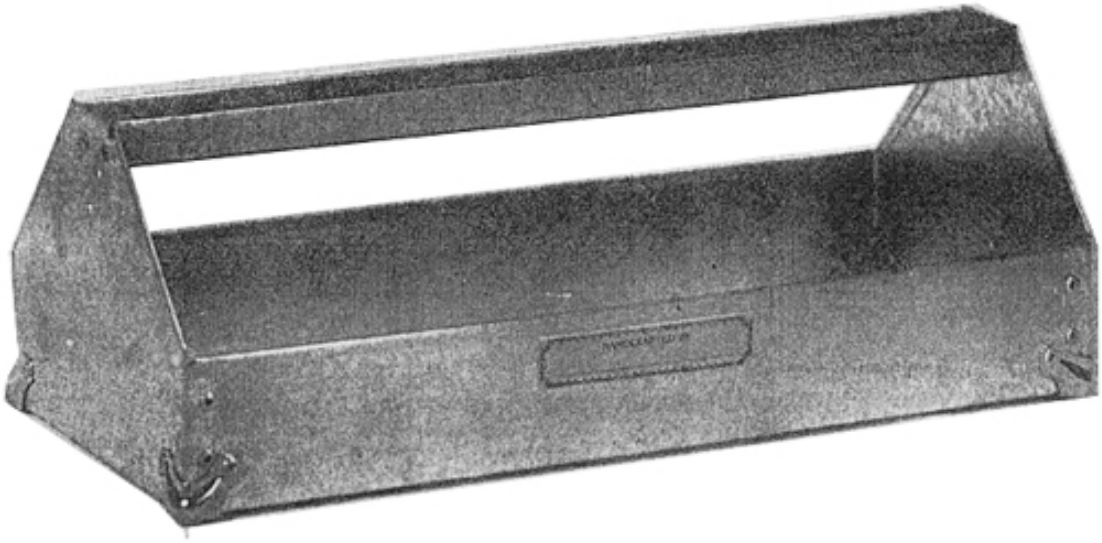

TOOL TRAY PAGE 2 OF 2

© Copyright 1970 Tom Fosseen. All rights reserved.
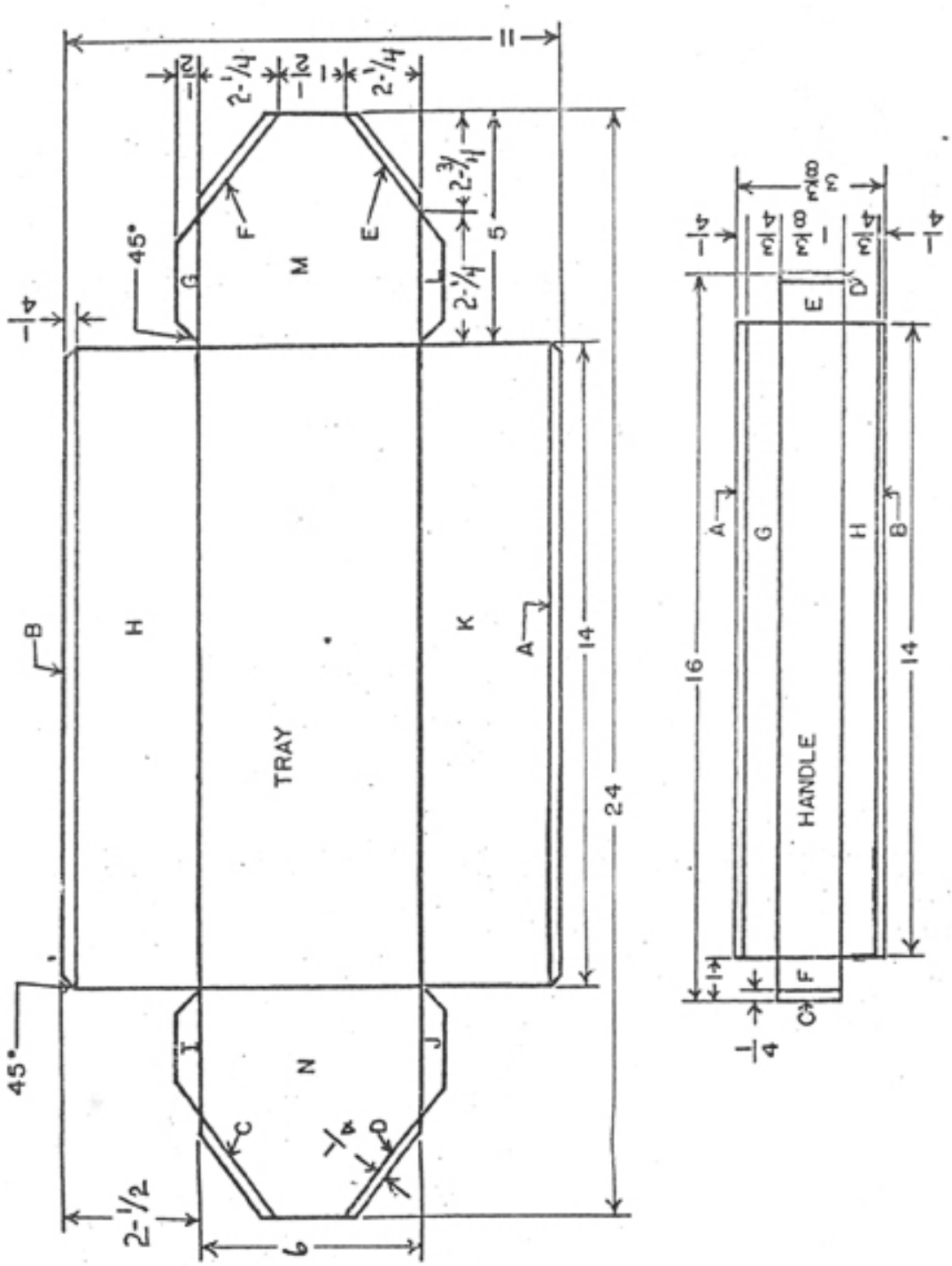
Selection of parts and quantities may vary.